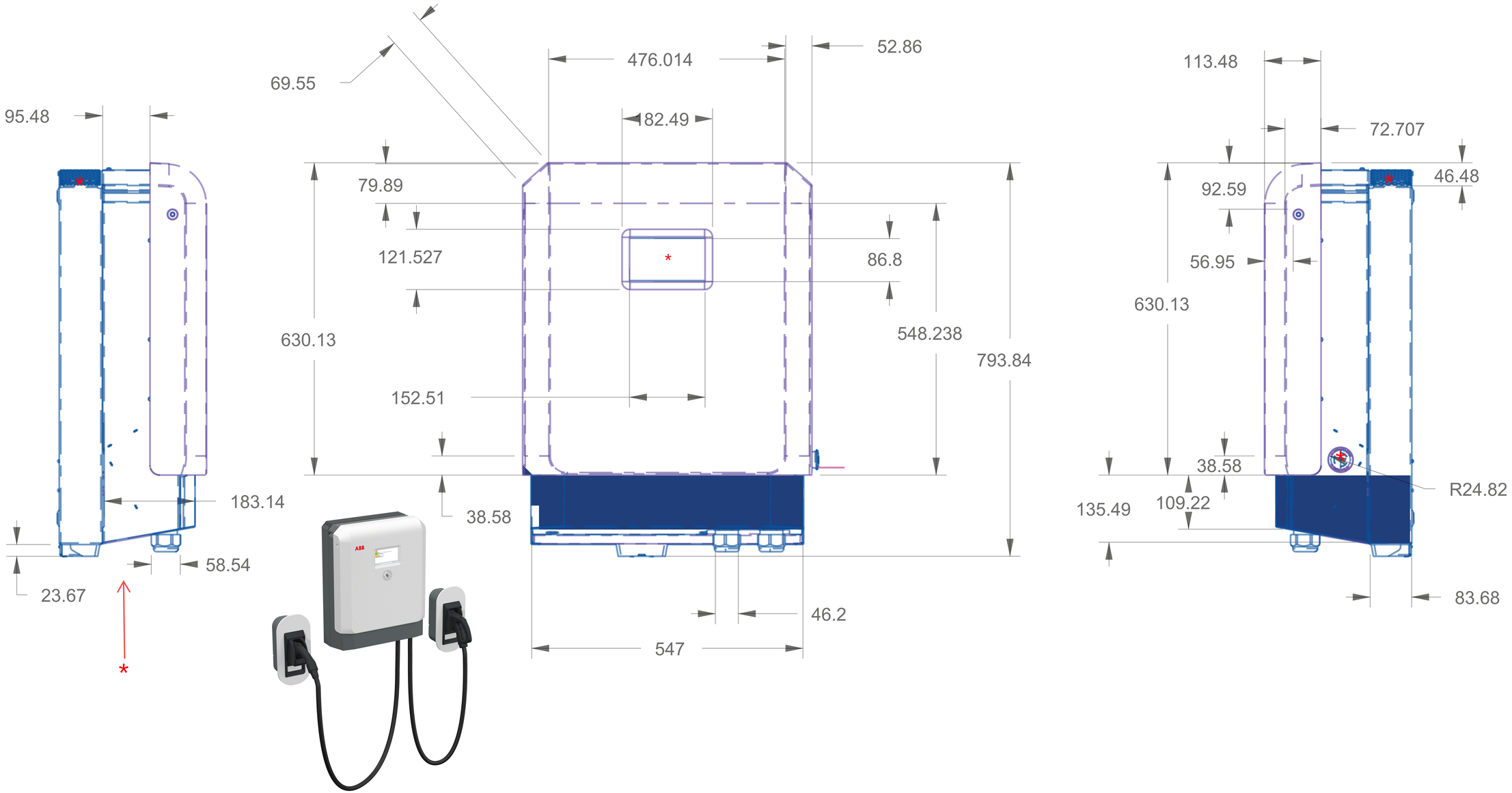Do not wrap zones market with *