1. Product must meet cosmetic standard requirements(Category A,B or C) specified in P1 Cosmetic standards procedure C02-QAM-001-2.
2. Supplier's inspection must complies FAI procedure C04-QAM-002-2.
3. Dimensions specified in oval are critical to function and require inspection. Dimensional Quality shall be CPK1.33 MIN.Provide report for minimum 33pcs batch.
4. Part(s) shall be adequately packaged to prevent damage in shipment and handling in cell type separators,protective wrapped as required.
5. ----Noted surfaces to be free of all scratches,ejector marks and shrink marks.

Drawing is for notes and CTF dimension only.Refer to individual CAD file for 3-D geometry.

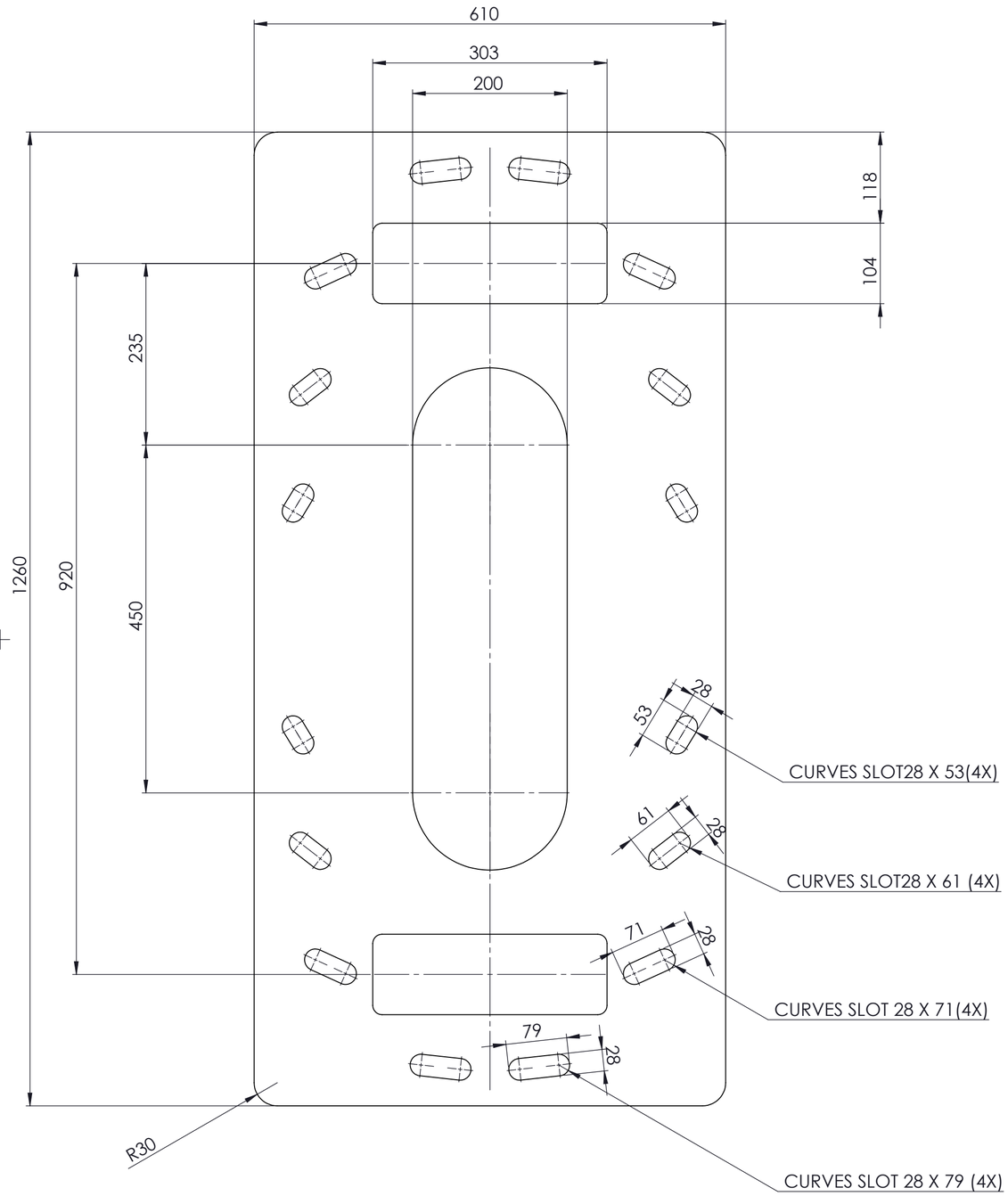

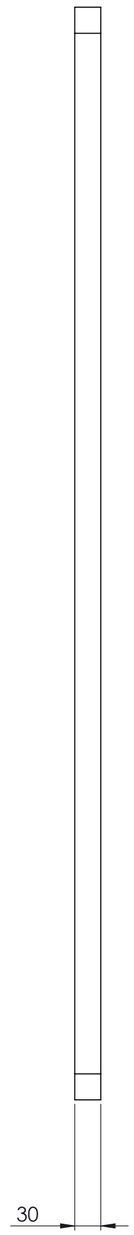

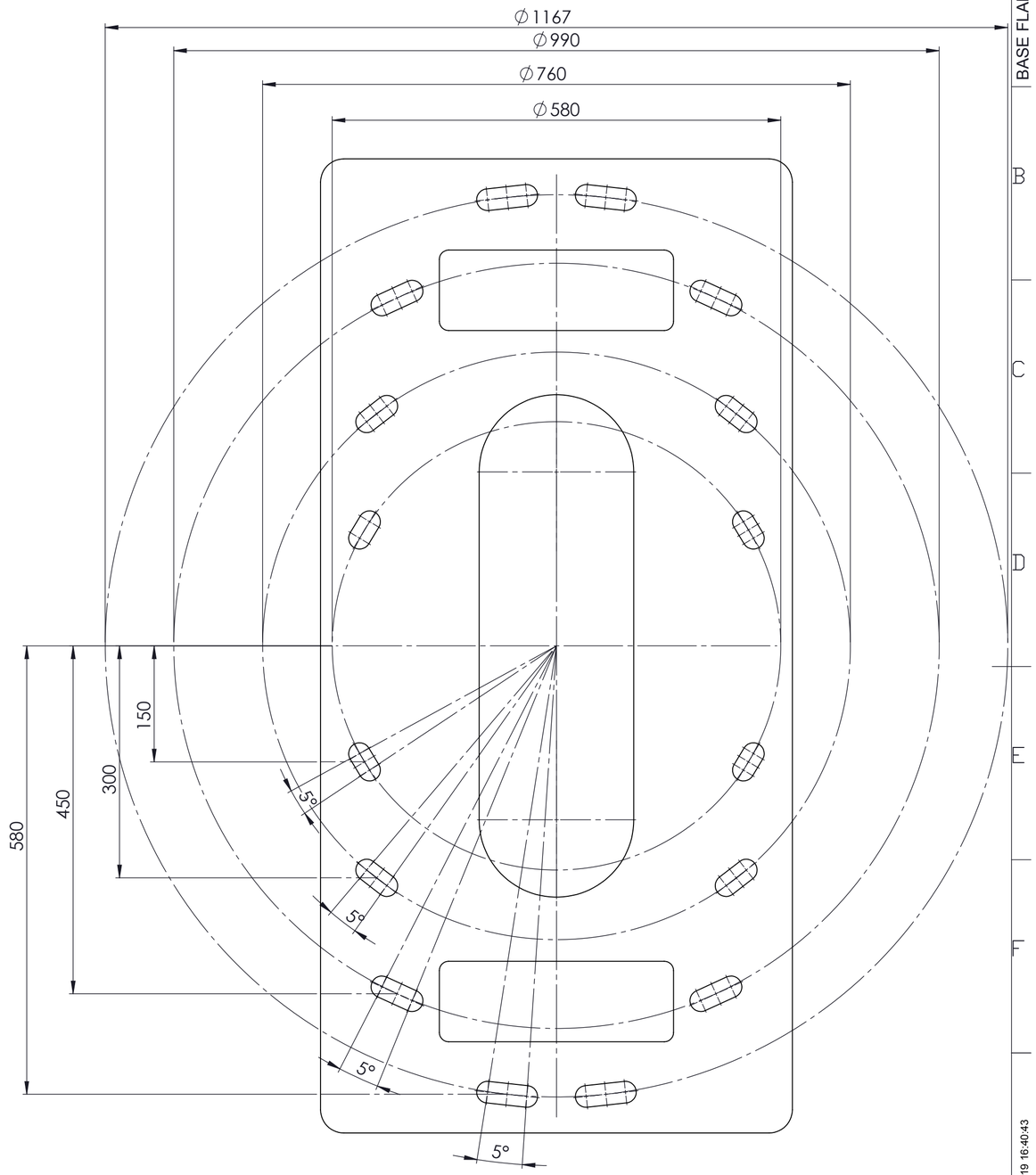

All material used, and finished product, must meet the requirements of the current RoHS directive of the European Union.

	Dimension with general tolerance according to ISO 2768					
Precision	0.5-3	3-6	6-30	30-120	120-400	400-1000
Fine	±0.05	±0.05	±0.1	±0.15	±0.2	±0.3
Medium	±0.1	±0.1	±0.2	±0.3	±0.5	±0.8
Coarse	±0.2	±0.3	±0.5	±0.8	±1.2	±2

Material	Treatment	Weight (Kg) 130.28	
Title: PLATE; BASE FLANGE RECTANGULAR 1260X610	Issued	21-05-2019	R.BRUINING
	Modified		
	Mech.Eng.approved		
	Elec.Eng.approved		
	Mfg.approved		

Size	Scale	Unit (mm)	Sheet	Drawing no.	Revision
A2	1:5		1/1	E000057514	AB

© Copyright 2017 Power-One Italy Spa. All rights reserved. Reproduction, use or disclosure to third parties without express written authority is strictly forbidden.

BASE FLANGE PANTO DOWN

Ultimo salvataggio: NLROBRU Wednesday 22 May 2019 16:40:43